Figure number	

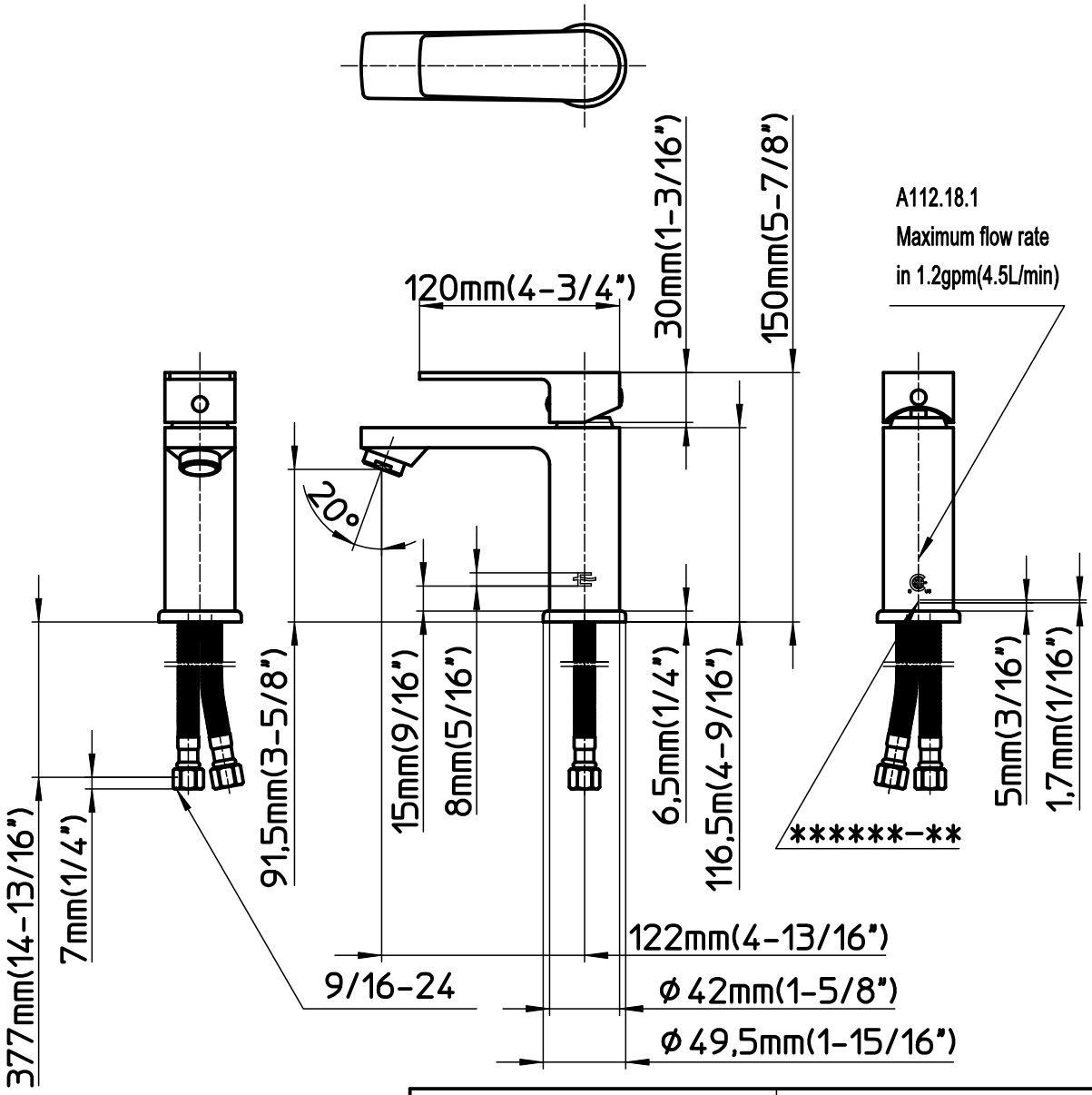

Code no	Finish
KXH3257-CR-C	(Chrome)
KXH3257-BN-C	(Brushed Nickel)
KXH3257-BLK-C	(Black)
KXH3257-PB-C	(Polished Brass)
KXH3257-BB-C	(Brushed Brass)

Remarks	1 set of Click drain(C119-041) is included.						
Name of article	**Lavatory Faucet for Residential Use**	Scale	Approved by	Drawing check by	Drawing by	Representative	Third angle projection
Item number	KXH3257-(Finish)-C	1 : 4	22• 7 •12	22• 7 •12	22• 7 •12	20• 5 •11	SANEI LTD.